薄型二迴路微電腦型類比信號輸入隔離傳送器
(SLIM TYPE TWO CHANNEL MICROPROCESS ANALOG SIGNAL ISOLATED TRANSMITTER)

MODEL SDMAT

■特點(FEATURES)

- •精確度0.05%滿刻度±1位數(Accuracy 0.05% F.S. ±1digit)
- •可量測交直流電流/交直流電壓/電位計/傳送器/Pt-100/熱電耦/荷重元/電阻...等信號
  (Measuring DCA/DCV/ACA/ACV/Potentiometer/Transmitter/Pt-100/Thermocouple/Load Cell/Resistor/etc...)
- •顯示範圍-19999~99999可任意規劃(Programmable rate -19999~99999 digit)
- •二迴路類比信號輸入與輸出隔離功能設計(Two channel input signal isolated output for design)
- •輸入1/輸入2與輸出1/輸出2與電源絕緣耐壓1.5仟伏特/1分鐘
  (Dielectric strength 1.5KVac/1min(input1/input2/output1/output2/power))
- •寬範圍交直流兩用電源設計(Wide input range for auxiliary power)
- •尺寸小,穩定性高(Dimension small & High stability)

1.MODEL:SDMAT-□ □□ ⊠⊠ - □ □ □→XX=00(One channel input isolated two output)
(選購型號)

NO	Input Type	NO	DCV(ACV)	NO	DCA(ACA)	NO	Transmitter	NO	Pt-100	NO	Load Cell	NO	Thermocouple	NO	Output Range	NO	Aux.Power
A	DC	11	0~50mV	21	0~99.999uA	41	DC4~20mA	54	-200~850°C	61	2mV/V	71	J(-200~760)°C	A	0~50mV	A	AC/DC18~60V
B	AC(RMS)	12	0~5V	22	0~999.99uA	42	DC1~5V	59	SPECIFIED	62	3mV/V	72	K(-200~1360)°C	C	1~5V	B	AC/DC90~260V
C	AC(TRMS)	13	0~10V	23	0~9.9999mA	43	DC4~20mA	•Three wire connection •Exciting current(<1.24mA) •Pt-100 & thermocouple is same input type		63	2mV/V	73	T(-200~395)°C	D	0~10V	•Less 4VA for AC/DC input	
D	Potentiometer	14	0~36V	24	0~99.999mA	44	DC1~5V			64	3mV/V	74	E(-185~990)°C	F	0~1mA		
E	Transmitter	15	0~54V	25	0~999.99mA	49	SPECIFIED			69	SPECIFIED	75	R(0~1760)°C	H	0~20mA		
F	Pt-100(RTD)	16	0~110V	26	0~2.0000A	•41/42 non-exciting DC24V •43/44 exciting DC24V (<25mA,only input 1)				•61/62 Exciting DC5V(<50mA) •63/64 Exciting DC10V(<50mA) •Input 1/2 is non-isolating		76	S(0~1750)°C	I	4~20mA		
G	Thermocouple	17	0~600V	27	0~5.0000A							77	B(200~1800)°C	R	SPECIFIED		
H	Load Cell	19	SPECIFIED	29	SPECIFIED							•CJC traceability < ±0.3°C(0~70°C)					
R	Resistor																

2.SPECIFICATION(主要規格)

•Measuring accuracy (精確度)(23±5℃)	:0.05% F.S. ±1 digit 0.1% F.S. ±1 digit(Pt-100) 0.2% F.S. ±1 digit(AC(RMS)) 0.2% F.S. ±0.3℃(CJC)(Thermocouple)
•Sampling time (取樣時間)	:16 cycles/sec.
•Readout range (顯示值範圍)	:-19999~99999 digit adjustable
•Input resistance (輸入阻抗)	:>1Mohm(<100V ranges) >2Mohm(>100V ranges) >5Mohm(>500V ranges) <0.2VA(Current ranges)
•Analog output resolution (類比輸出解析度)	:16 bit DAC(Isolating)
•Response time (輸出反應速度)	:<250ms(0~90%)
•Output drive capability (輸出負載能力)	:<10mA for voltage mode <10V for current mode
•Output ripple(p-p) (輸出之漣波)	:0.1%F.S.
•Zero(offset) range (歸零調整範圍)	:0~±6000 digit adjustable
•Span(scale) range (最大值調整範圍)	:0~±6000 digit adjustable
•Temp. coefficient (溫度係數)	:50ppm/℃(0~50℃)
•Display (顯示幕)	:Red high efficiency LEDs high 6.8mm(0.268")
•Parameter setting (參數設定方式)	:Touch switches
•Memory mode (記憶型式)	:Flash memory
•Isolation (隔離特性)	:Input1/Input2/Output1/Output2/Power/Case
•Insulation Resistance (絕緣阻抗)	:>100Mohm with 500VDC
•Dielectric strength (絕緣耐壓能力)	:1.5KVac/1 min.(input1/input2/Output1/Output2/power) 1200Vdc(input/output)
•Operating condition (使用環境條件)	:0~60℃(20 to 90% RH non-condensed)
•Storage condition (存放環境條件)	:0~70℃(20 to 90% RH non-condensed)
•CE EMC Certification (CE 認證)	:EN 55022:1998/A1:2000 Class A EN 61000-3-2:2000 EN 61000-3-3:1995/A1:2001 EN55024:1998/A1:2001
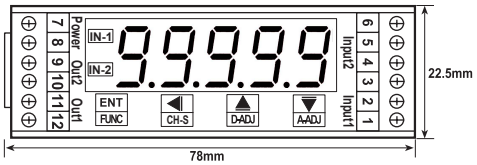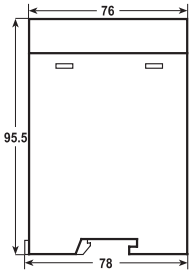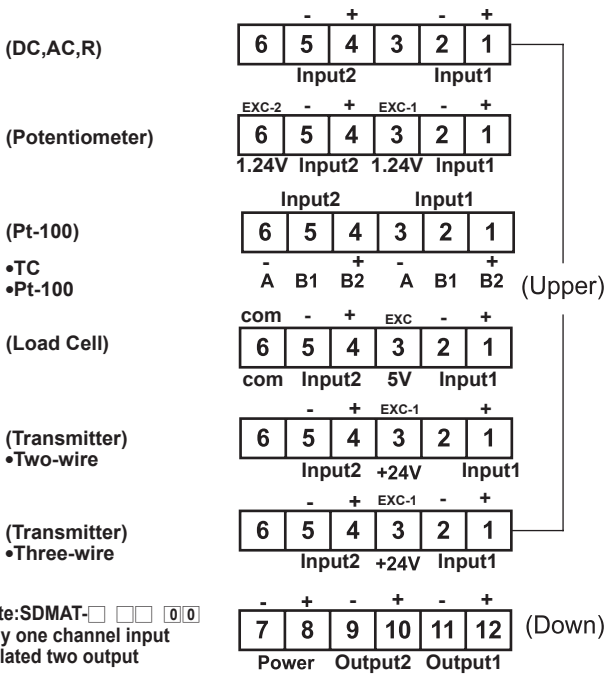
3.OUTSIDE DIMENSION(unit=mm) AND CONNECTION DIAGRAM
(外型尺寸(unit=mm)與配線圖)